LONG NECK Pry-Off 0.200



KMC
GLASS

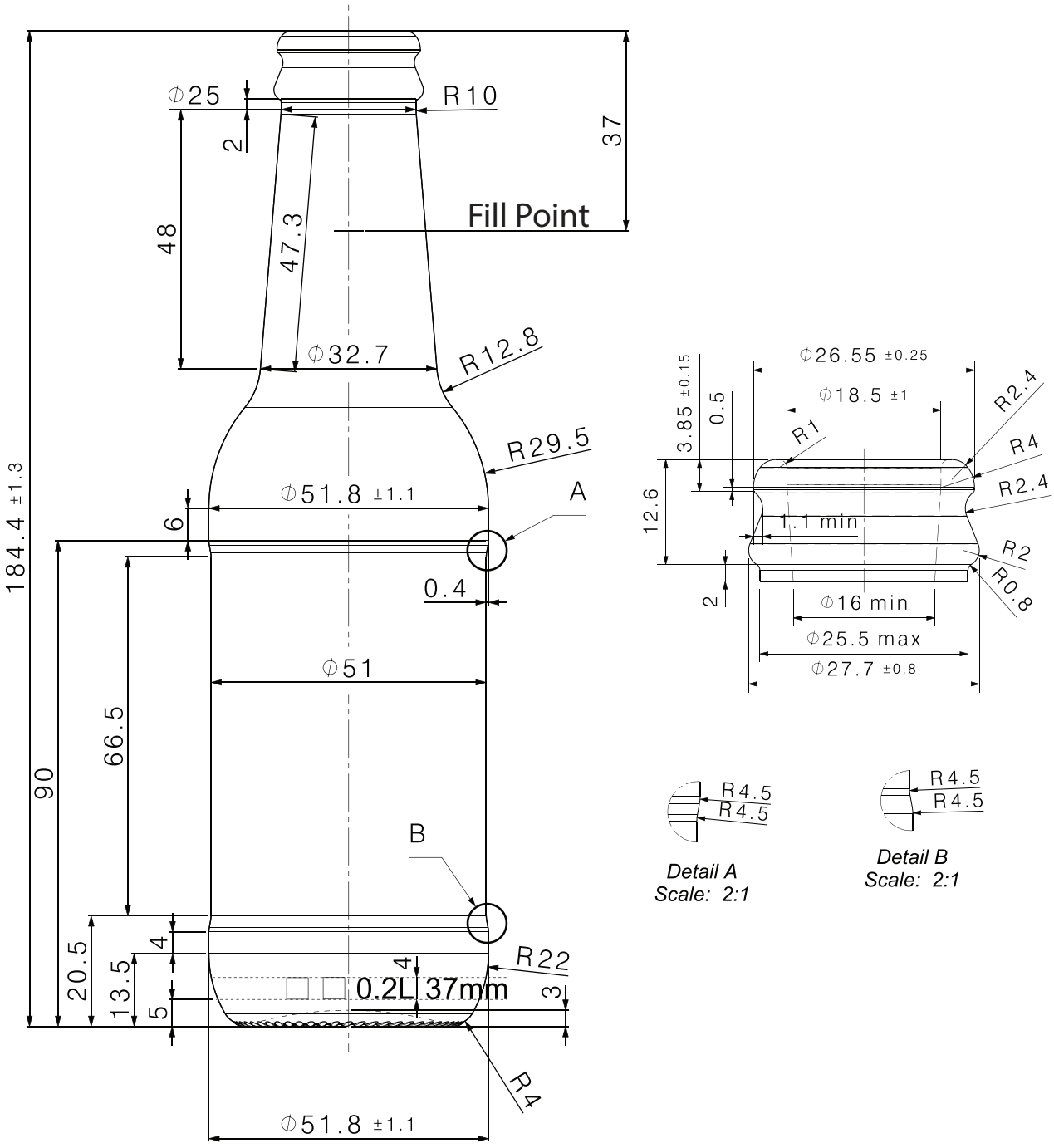

- Long Neck Pry-Off
- Filling CAP - 200 ml
- Weight - 148 g
- Height - 184.4 mm
- Diameter - 51.8 mm
- Finish - CETIE GME 13.02
- Color - Flint

www.kmc.glass
sales@kmc.glass

KMC GLASS